SynQor®

Advancing the Power Curve®

Hi-Rel™

Military / Aerospace DC-DC converters

MIL-STD Compliant

High Efficiency

Field Proven

Hi-Rel Military Grade DC-DC Converters & Filters

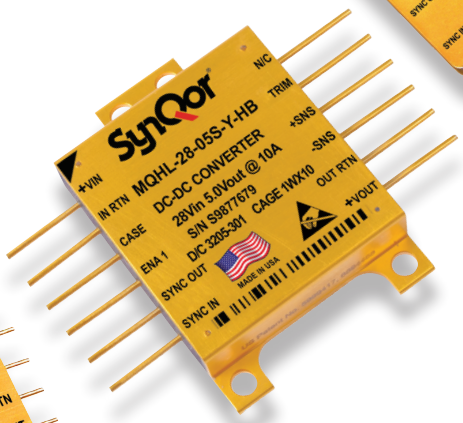

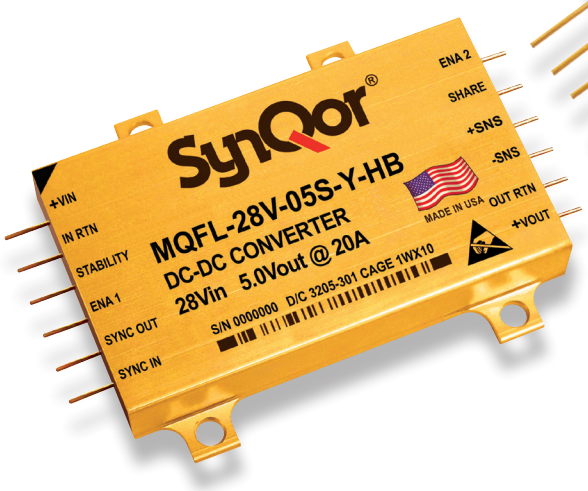

Made in USA

MilQor®

Products for the

Military and Aerospace Industry

Hi-Rel™

Isolated Converters

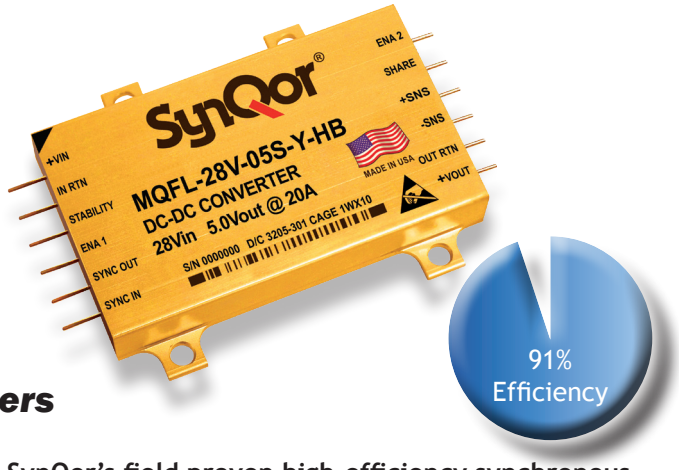

High-Reliability, Field Proven DC-DC Converters for Military/Avionics Applications

The MilQor® series of high-reliability DC-DC converters brings SynQor's field proven high-efficiency synchronous rectifier technology to the Military/Avionics industry. SynQor's innovative QorSeal® packaging approach ensures survivability in the most hostile environments. Compatible with the industry standard format, these converters operate at a fixed frequency, have no opto-isolators, and follow conservative component derating guidelines.

Hi-Rel Product Features

- Fixed switching frequency
- No opto-isolators
- Parallel operation with current share on MQFL
- Remote sense
- Clock synchronization
- Primary referenced enable
- Secondary referenced enable on MQFL
- Continuous short circuit and overload protection with auto-restart feature
- Input under-voltage and over-voltage shutdown
- Output voltage trim range (MQHL, MQHR & MQBL) +10% to -10%
- -55 °C to +125 °C Operating Temperature

Design Process

***Hi*-Rel series converters are:**

- Designed for reliability per:
  - NAVSO P-3641 A guide
- Designed with components derated per:
  - MIL-HDBK-1547 A
  - NAVSO P-3641 A

Mechanical

- ***QorSeal*®** packaging
- Industry standard footprint for MQFL & MQME
- Multiple mounting configurations and lead form options
- Gold plated nickel barrier finish on an extruded aluminium case

In-Line Manufacturing Process

- AS9100 and ISO 9001 certified facility
- Full component traceability
- Temperature cycling
- Constant acceleration screening
- 24, 96, 160 hour burn-in
- Three level temperature screening

Qualification Process

***Hi*-Rel series converters are qualified to:**

- MIL-STD-810 consistent with RTCA/DO-160
- SynQor's First Article Qualification
  - consistent with MIL-STD-883
- SynQor's Long-Term Storage Survivability Qual.
- SynQor's on-going life test
- SynQor's element evaluation for HB & ES Grade

Specification Compliance

***Hi*-Rel series converters (with Hi-Rel filter) are designed to meet:**

- MIL-HDBK-704
- RTCA/DO-160 Section 16, 17, 18
- MIL-STD-1275
- DEF-STAN 61-5 (Part 6)/(5, 6)
- MIL-STD-461
- RTCA/DO-160 Section 22

SynQor designs and manufactures in the United States of America

SynQor

Full Size (MQFL)	Single Output 1.5 V 1R5S	1.8 V 1R8S	2.5 V 2R5S	3.3 V 3R3S	5 V 05S	6 V 06S	6.5 V 6R5S	7.2 V 7R2S	7.5 V 7R5S	7.7 V 7R7S	8 V 08S	9 V 09S	12 V 12S	15 V 15S	28 V 28S	Dual Output† ±5 V 05D	±6.5 V 6R5D	±12 V 12D	±15 V 15D
MQFL-28 (120 W) 16-40 Vin Cont. 16-50 Vin 1s Trans. Absolute Max Vin = 60 V	40 A 60 W	40 A 72 W	40 A 100 W	30 A 99 W	24 A 120 W	20 A 120 W	18 A 117 W	16 A 115 W	16 A 120 W	16 A 120 W	15 A 120 W	13 A 117 W	10 A 120 W	8 A 120 W	4 A 112 W	24 A 120 W Total	18 A 117 W Total	10 A 120 W Total	8 A 120 W Total

Full Size (MQFL)	Single Output 1.5 V 1R5S	1.8 V 1R8S	2.5 V 2R5S	3.3 V 3R3S	5 V 05S	6 V 06S	7.5 V 7R5S	9 V 09S	12 V 12S	15 V 15S	28 V 28S	Dual Output† ±5 V 05D	±12 V 12D	±15 V 15D
MQFL-28E (120 W) 16-70 Vin Cont. 16-80 Vin 1s Trans. Absolute Max Vin =100 V	40 A 60 W	40 A 72 W	40 A 100 W	30 A 99 W	24 A 120 W	20 A 120 W	16 A 120 W	13 A 117 W	10 A 120 W	8 A 120 W	4 A 112 W	24 A 120 W Total	10 A 120 W Total	8 A 120 W Total
MQFL-28V (100 W) 16-40 Vin Cont. 5.5-50 Vin 1s Trans. Absolute Max Vin = 60 V				30 A 99 W	20 A 100 W			11 A 99 W	8 A 96 W		3.3 A 92 W			
MQFL-28VE (100 W) 16-70 Vin Cont. 5.5-80 Vin 1s Trans. Absolute Max Vin = 100 V				30 A 99 W	20 A 100 W			11 A 99 W	8 A 96 W		3.3 A 92 W			
MQFL-270 (120 W) 155-400 Vin Cont. 155-475 Vin 1s Trans. Absolute Max Vin = 550 V	40 A 60 W	40 A 72 W	40 A 100 W	30 A 99 W	24 A 120 W	20 A 120 W	16 A 120 W	13 A 117 W	10 A 120 W	8 A 120 W	4 A 112 W	24 A 120 W Total	10 A 120 W Total	8 A 120 W Total
MQFL-270L (75 W) 65-350 Vin Cont. 65-475 Vin 1s Trans. Absolute Max Vin = 550 V					15 A 75 W					5 A 75 W	2.7 A 75 W			

Half Size (MQHL)	Single Output 1.5 V 1R5S	1.8 V 1R8S	2.5 V 2R5S	3.3 V 3R3S	5 V 05S	6 V 06S	7.5 V 7R5S	9 V 09S	12 V 12S	15 V 15S	28 V 28S	Dual Output† ±5 V 05D	±12 V 12D	±15 V 15D
MQHL-28 (50 W) 16-40 Vin Cont. 16-50 Vin 1s Trans. Absolute Max Vin = 60 V	20 A 30 W	20 A 36 W	20 A 50 W	15 A 50 W	10 A 50 W	8 A 48 W	6.6 A 50 W	5.5 A 50 W	4 A 48 W	3.3 A 50 W	1.8 A 50 W	10 A 50 W Total	4 A 48 W Total	3.3 A 50 W Total
MQHL-28E (50 W) 16-70 Vin Cont. 16-80 Vin 1s Trans. Absolute Max Vin =100 V	20 A 30 W	20 A 36 W	20 A 50 W	15 A 50 W	10 A 50 W	8 A 48 W	6.6 A 50 W	5.5 A 50 W	4 A 48 W	3.3 A 50 W	1.8 A 50 W	10 A 50 W Total	4 A 48 W Total	3.3 A 50 W Total
Half Size (MQHR)	**1.5 V 1R5S**	**1.8 V 1R8S**	**2.5 V 2R5S**	**3.3 V 3R3S**	**5 V 05S**	**6 V 06S**	**7.5 V 7R5S**	**9 V 09S**	**12 V 12S**	**15 V 15S**	**28 V 28S**	**±5 V 05D**	**±12 V 12D**	**±15 V 15D**
MQHR-28 (25 W) 16-40 Vin Cont. 16-50 Vin 1s Trans. Absolute Max Vin = 60 V	10 A 15 W	10 A 18 W	10 A 25 W	7.5 A 25 W	5 A 25 W	4 A 24 W	3.3 A 25 W	2.75 A 25 W	2 A 24 W	1.65 A 25 W	0.9 A 25 W	5 A 25 W Total	2 A 24 W Total	1.65 A 25 W Total
MQHR-28E (25 W) 16-70 Vin Cont. 16-80 Vin 1s Trans. Absolute Max Vin =100 V	10 A 15 W	10 A 18 W	10 A 25 W	7.5 A 25 W	5 A 25 W	4 A 24 W	3.3 A 25 W	2.75 A 25 W	2 A 24 W	1.65 A 25 W	0.9 A 25 W	5 A 25 W Total	2 A 24 W Total	1.65 A 25 W Total

Bottom Pin (MQBL)	2.5 V 2R5S	3.3 V 3R3S	5 V 05S	6 V 06S	7.5 V 7R5S	9 V 09S	12 V 12S	15 V 15S	28 V 28S	Dual Output† ±5 V 05D	±12 V 12D	±15 V 15D
MQBL-28 (20 W) 16-40 Vin Cont. 16-50 Vin 1s Trans. Absolute Max Vin = 60 V	8 A 20 W	6 A 19.8 W	4 A 20 W	3.3 A 19.8 W	2.6 A 19.5 W	2.2 A 19.8 W	1.6 A 19.2 W	1.3 A 19.5 W	0.72 A 20.2 W	4 A 20 W Total	1.6 A 19.2 W Total	1.3 A 19.5 W Total
MQBL-28E (20 W) 16-70 Vin Cont. 16-80 Vin 1s Trans. Absolute Max Vin =100 V	8 A 20 W	6 A 19.8 W	4 A 20 W	3.3 A 19.8 W	2.6 A 19.5 W	2.2 A 19.8 W	1.6 A 19.2 W	1.3 A 19.5 W	0.72 A 20.2 W	4 A 20 W Total	1.6 A 19.2 W Total	1.3 A 19.5 W Total

Bottom Pin (MQSA)	Single Output 5 V 05S	12 V 12S	15 V 15S	28 V 28S
MQSA-28 (5 W) 16-40 Vin Cont. 16-50 Vin 1s Trans. Absolute Max Vin = 60 V	1 A 5 W	0.42 A 5 W	0.33 A 5 W	0.18 A 5 W
MQSA-28E (5 W) 16-70 Vin Cont. 16-80 Vin 1s Trans. Absolute Max Vin =100 V	1 A 5 W	0.42 A 5 W	0.33 A 5 W	0.18 A 5 W

Bus Converters (MQBQ)	Vout = ~Vin/1 28B
MQBQ-28 18-40 Vin Cont. 16-50 Vin 1s Trans. Absolute Max Vin = 60 V	14 A 400 W

Bus Converters (MQBQ)	Vout = ~Vin/9 28B
MQBQ-270 230-400 Vin Cont. 155-450 Vin 1s Trans. Absolute Max Vin = 550 V	14 A 400 W

† 80% of total output available on any one output.

Hi-Rel™

EMI filters are available with passive components only, or with additional active circuitry that provides surge/spike suppression, soft start in-rush limiting, reverse-polarity protection, and enable signal pass-through. They also are available in standard and extended input voltage ranges.

Hi-Rel™ EMI DC Filters

Model Number	Input Voltage		Output Current	Isolation Voltage (to case)	Maximum DC Resistance @ 125 °C	Differential-Mode Attenuation (@ 500 kHz)	Common-Mode Attenuation (@ 500 kHz)
	Continuous	Surge[3] (≤100ms)					
Full Size							
MQME-28-P	± 40 V	±100 V	20 A	500 V	35 mΩ	>80 dB	>60 dB
MQME-28-T[1]	±40 V	+100, -50 V	20 A	500 V	60 mΩ	>80 dB	>60 dB
MQME-28E-P	±70 V	±100 V	20 A	500 V	35 mΩ	>80 dB	>60 dB
MQME-28E-T[1]	+70, -40 V	+100 V, -50 V	20 A	500 V	60 mΩ	>80 dB	>60 dB
MQME-28E-T6[1]	+70, -40 V	+100 V, -50 V	20 A	500 V	60 mΩ	>80 dB	>60 dB
MQME-270-P	±400 V	±1000 V	2.0 A	500 V	1.6Ω	>80 dB	>60 dB
MQME-270-R[2]	±400 V	±1000 V	2.0 A	500 V	1.6Ω	>80 dB	>60 dB
MQME-270L-P[4]	±400 V	±500 V	3.0 A	500 V	0.86Ω	>80 dB	>60 dB
MQME-270L-R[2,4]	±400 V	±500 V	3.0 A	500 V	0.86Ω	>80 dB	>60 dB
Half Size							
MQHE-28-P	±40 V	±100 V	10 A	500 V	60 mΩ	>80 dB	>60 dB
MQHE-28E-P	±70 V	±100 V	10 A	500 V	60 mΩ	>80 dB	>60 dB
MQHE-270-P	±400 V	±500 V	1.0 A	500 V	450 mΩ	>50 dB	>60 dB

Note 1 - *T and T6 filters feature enable pass-through, transient suppression, soft-start and reverse polarity protection circuitry in addition to passive filter components.*
Note 2 - *R filters feature reverse polarity protection circuitry in addition to passive filter components.*
Note 3 - *While the passive filters can withstand these long-duration surge voltages, the surge voltage will be passed to the filter's load. Care should therefore be taken to make sure that the load will also be able to withstand any applied surges. The transient suppression filters block surges of either polarity, as specified in their data sheets*
Note 4 - *Designed specifically to be matched with MQFL-270L DC-DC converters.*

Hi-Rel™ Screening

Screening Level	Consistent with MIL-STD-883	C-Grade (0 °C to +70 °C)	ES-Grade (-45 °C to +100 °C)	HB-Grade (-55 °C to +125 °C)
Element Evaluation		No	Yes	Yes
Internal Visual	Per IPC-A-610 Class III	Yes	Yes	Yes
Temperature Cycle	Method 1010	No	Condition B (-55 °C to +125 °C)	Condition C (-65 °C to +150 °C)
Constant Acc.	Method 2001 (Y1 direction)	No	500 g	Condition A (5000 g)
Burn-In	Method 1015	24hrs @ +125 °C	96hrs @ +125 °C	160hrs @ +125 °C
Final Electrical Test	Method 5005 (Group A)	+25 °C	-45 °C, +25 °C, +100 °C	-55 °C, +25 °C, +125 °C
External Visual	Method 2009	Yes	Yes	Yes
Construction			QorSeal®	QorSeal®

FL/ME PACKAGE

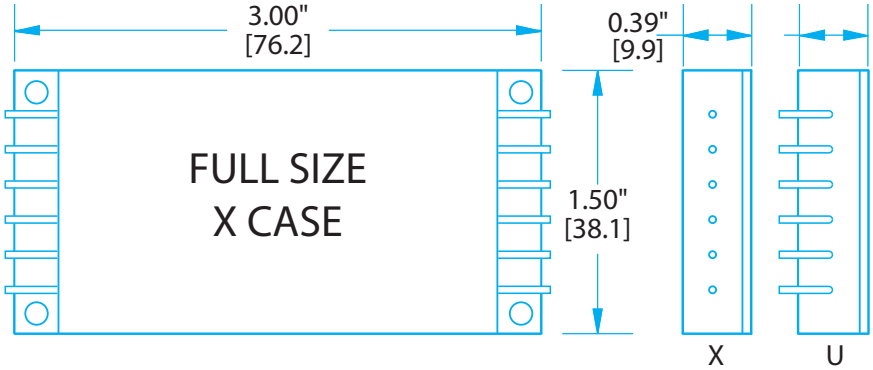

MilQor® Hi-Rel™

PACKAGES

Hi-Rel products are available in a variety of package mounting and lead form configurations. See website for data sheets with more details.

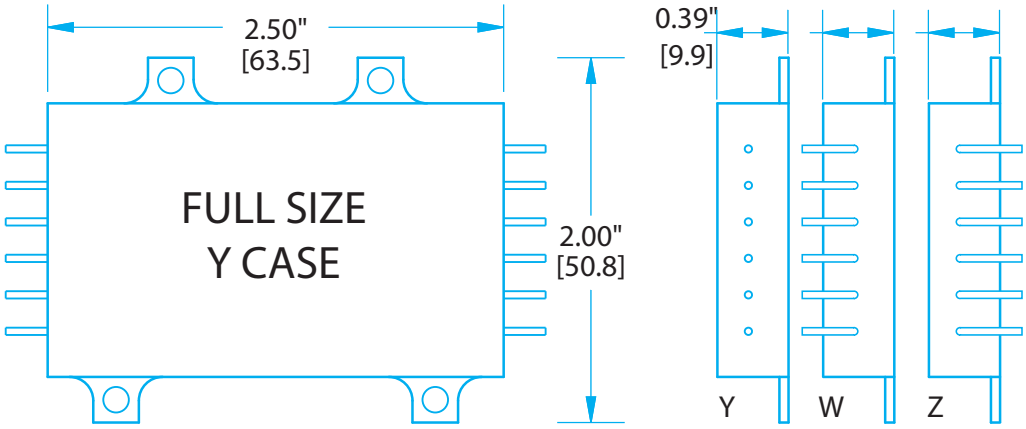

SA PACKAGE

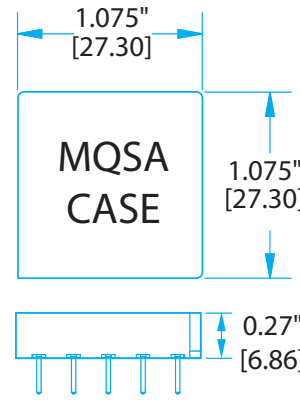

HL/HR/HE PACKAGE

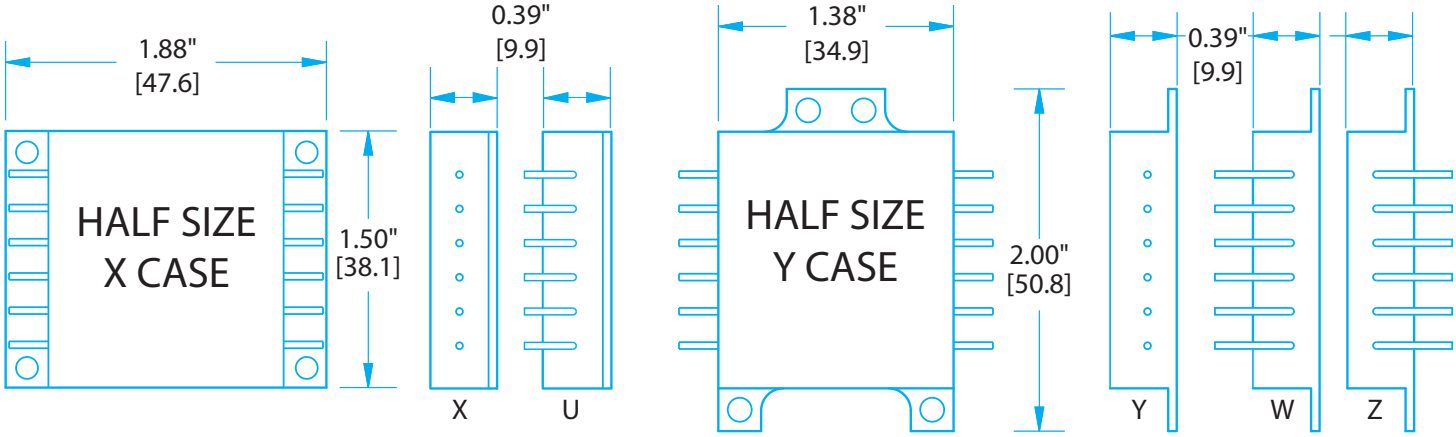

BL PACKAGE

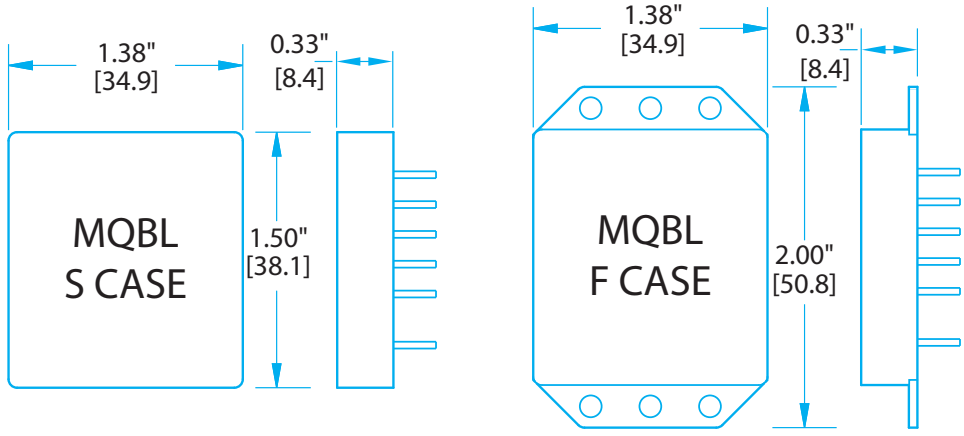

Made in USA

Advancing The Power Curve®

Headquartered in Boxborough, Massachusetts, at the location of its manufacturing operations, SynQor is a privately owned U.S. AS9100 and ISO 9001 company. SynQor's converters feature a patented two-stage power topology that greatly improves efficiency and optimizes the power dissipated by the converter. With a design center in Texas, and sales/marketing offices throughout the World, SynQor is the technology, quality and service leader for power conversion modules and systems.

SynQor's rugged DC-DC converters, AC-DC converters, filters and systems are designed for a wide range of industrial and military applications including those required to withstand harsh environments: railway and transportation systems, industrial motion control, information displays, factory automation, critical military and power generation systems.

The MilQor® series of Uninterruptible Power Supply units (UPS), Hi-Rel and Mil-COTS DC-DC converters and EMI filters brings SynQor's field proven high-efficiency synchronous-rectifier technology to the Military/Aerospace industry.

SynQor Headquarters
155 Swanson Road Boxborough, MA 01719-1316
Phone: 978-849-0600 Fax: 978-849-0602
E-mail: power@synqor.com
www.SynQor.com

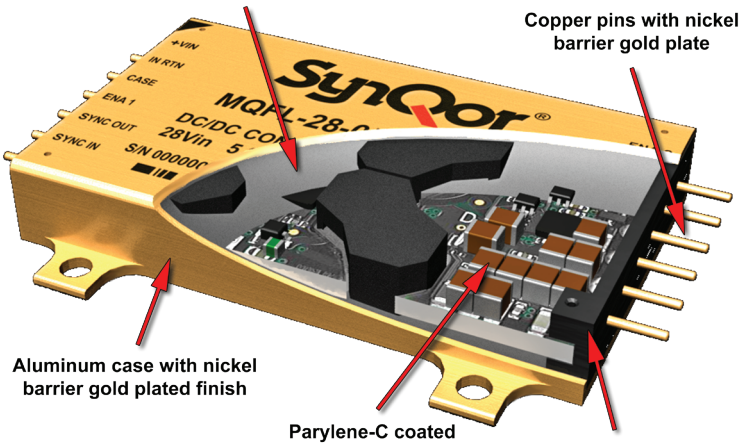

QorSeal Packaging

Our unique QorSeal® packaging approach provides a conduction-cooled mechanical assembly around an SMT constructed power circuit that is low-profile, light-weight, and shielded.