UPS MILITARY SHELTER-GRADE

Uninterruptible Power Supply

Shelter-Grade

Rugged Metal Construction

SynQor®

UPS MILITARY SHELTER-GRADE Uninterruptible Power Supply

SynQor's family of rack-mounted Military Shelter-Grade Uninterruptible Power Supply units are designed for the environmental and electrical conditions of Military applications. SynQor's UPS incorporates proven high efficiency designs and packaging technologies. This UPS will accept a wide range of input voltage and frequency values while delivering a well-conditioned AC output to the load. The use of lithium ion batteries permits the lowest profile and lowest weight solution in its power class. It is designed to comply with a wide range of military standards.

UPS PRODUCT FEATURES

- Hot swappable internal battery pack (lithium ion)
- UPS-MS-1500-S-2U, >10 minute run-time at full power
- 1250W (1500VA) output power
- Full power operation: -10°C to +50°C
- Universal AC input: 80-265VAC; 47-65Hz
- Power factor correction at AC input
- True on-line double conversion
- Cold-start with no AC input connections
- Pure sinusoidal AC output voltage
- Handles 0.0—1.0 power factor loads and non-linear loads
- User I/O and Configuration signal ports
- 2U high rack mount unit [16.92"W x 22.13"D x 3.40"(2U)H]
- Low weight: 42 lbs. (including battery)

SPECIFICATION COMPLIANCE

UPS-MS-1500 units are designed to meet:

- MIL-STD-461F
  - Electromagnetic Interference
- MIL-STD-810G
  - Environmental Engineering Considerations
- Mil-STD-1399-300B
  - Interface Shipboard Systems

IN-LINE MANUFACTURING PROCESS

- AS9100 and ISO 9001 certified facility
- Full component traceability

OPTIONS

- 115Vrms or 230Vrms AC output
- 50Hz or 60Hz output
- UPS-MS-1500-H-2U, > 13.5 minutes of run-time

Output Options

Base Model				
Model Number	**Power**	**Battery Run-Time@Full Power** (80% Power)	**Height** (W x D x H)	**Weight**
UPS-MS-1500-S-2U (1 BAT-0200-S Battery Pack)	**1250 W 1500 VA**	**>10 min.** (>13 min.)	**2U** (16.92″ x 22.13″ x 3.40″)	**40**
UPS-MS-1500-H-2U (1 BAT-0400-H Battery Pack)	**1250 W 1500 VA**	**>13.5 min.** (>18 min.)	**2U** (16.92" x 22.13" x 3.40")	**41.8 lbs.**

Base Models	Options				
	AC Input Freq	AC Output Voltage	AC Output Neutral Wire	AC Output Set Point Freq	Additional Options
UPS-MS-1500-S-2U- UPS-MS-1500-H-2U-	L	1 2 3 4	G	5 6	-E 00 CE

Not all combinations make valid part numbers, please contact SynQor for availability. See the Product Summary web page for more options.

Options		
AC Input Freq	L	47-65 Hz
AC Output Voltage	1	115 Vrms
	2	230 Vrms - EU
	3	230 Vrms - UK
	4	230 Vrms - ANZ
AC Output Neutral Wire	G	Grounded
AC Output Set Point Freq	5	50 Hz
	6	60 Hz
Additional Options	-E	Ethernet/SNMP with Configuration Loading
	00	No CE Marking
	CE	CE Marking (230 V only)

Examples:
UPS-MS-1500-S-2U-L1G6-E00, UPS-MS-1500-S-2U-L2G5-E00, UPS-MS-1500-S-2U-L2G5-ECE (230 V output with CE marking)

Block Diagram

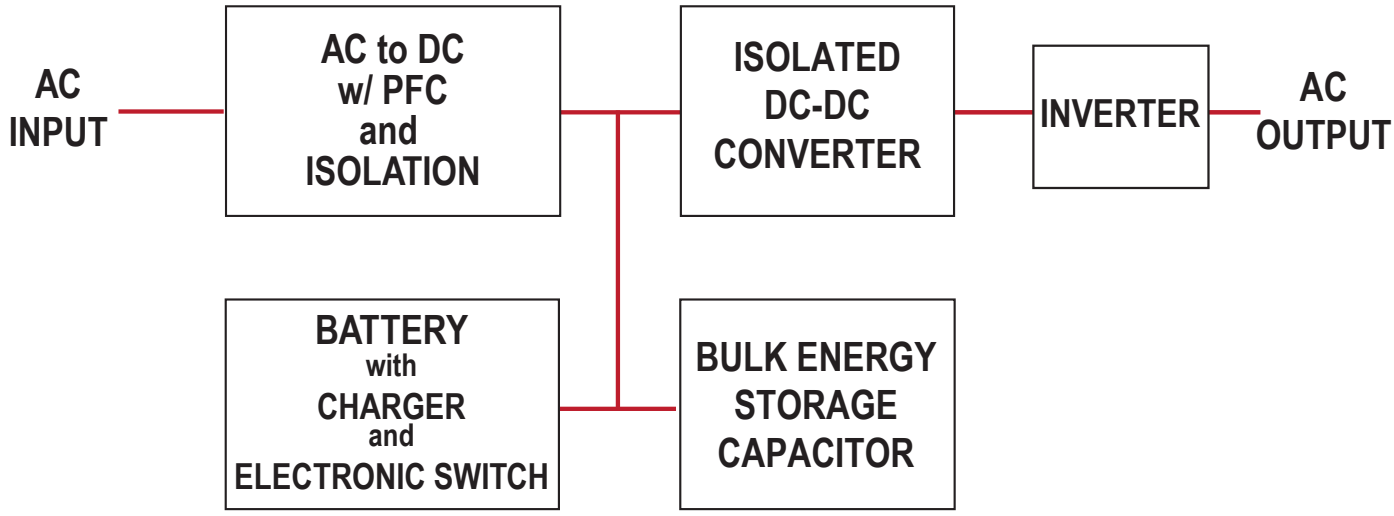

Mechanical diagram

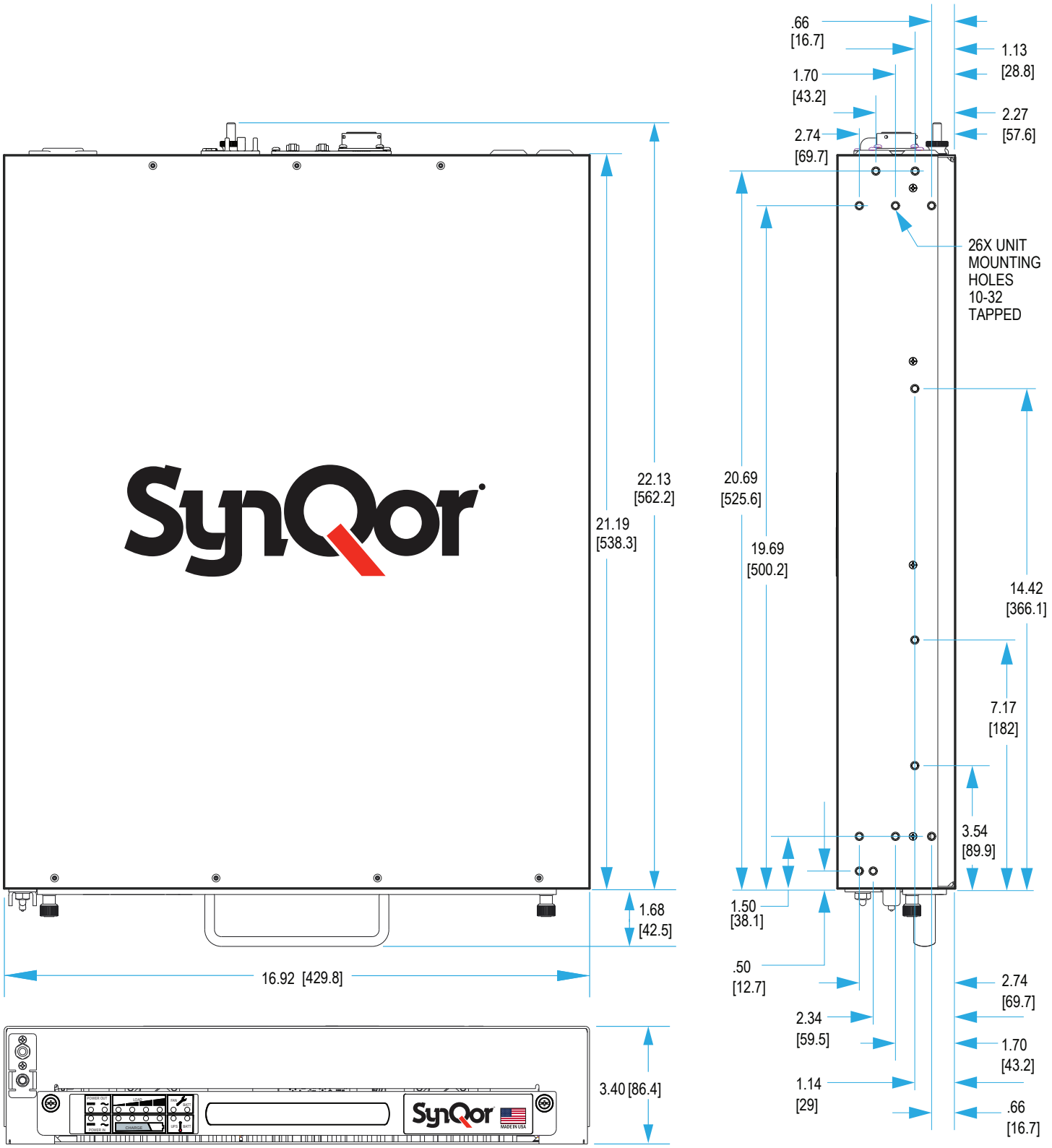

UPS MILITARY SHELTER-GRADE Uninterruptible Power Supply

UPS-MS-1500

AC Output Connector | Ethernet Port | Circuit Breaker | AC Input Connector

US

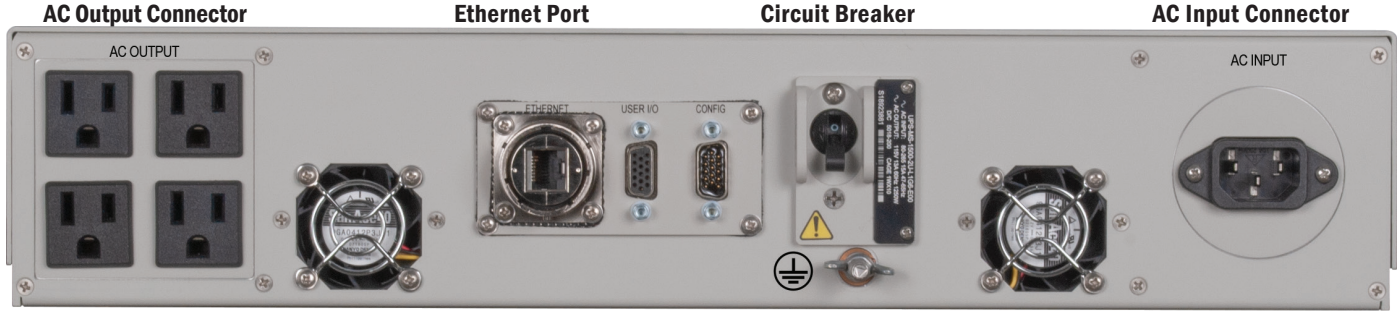

NEMA 5-15R (115V) | Exhust Fan | User I/O | CONFIG Port | Ground | Exhaust Fan | IEC 320-C14

EU

Type F (EU-230V)

UK

Type G (UK-230V)

ANZ

Type I (ANZ-230V)

Power Converters & Systems

SynQor, Inc.
E-mail: power@synqor.com
Phone: 978-849-0600
Fax: 978-849-0602
www.SynQor.com